GROVE GMK6450-1
450T ALL-TERRAIN CRANE

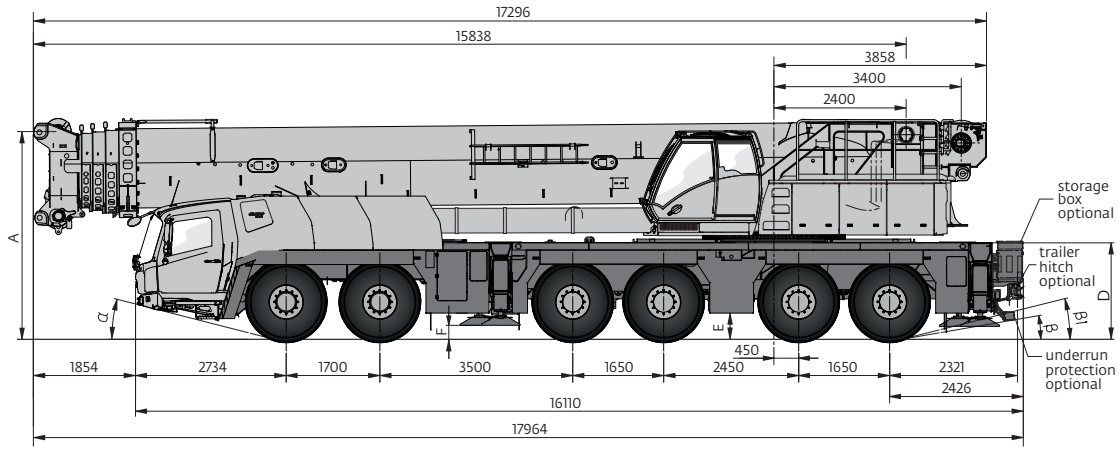

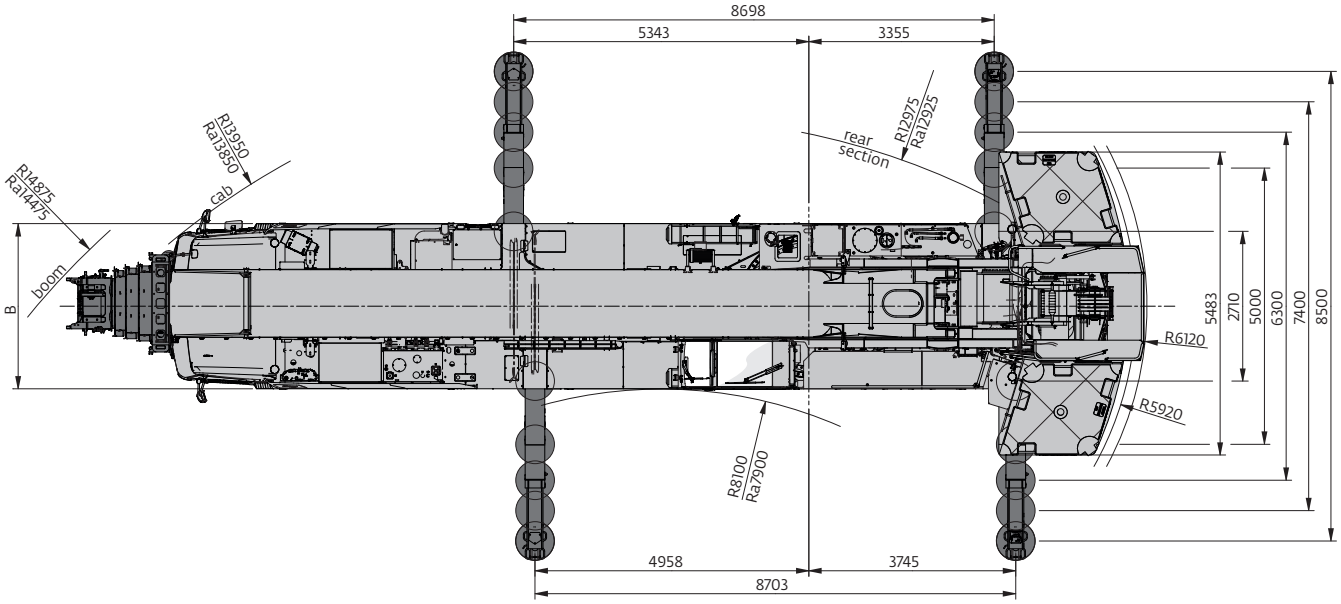

Ra = Radius all wheels steered. •

	A	A	B	C	D	E	F	α	β	β_1
385/95 R25 (14.00 R25)	4000	3874	3000	2570	1755	475	254	14°	10°	14°
445/95 R25 (16.00 R25)	4000	3924	3000	2510	1755	475	254	14°	10°	14°
525/80 R25 (20.5 R25)	4000	3924	3100	2530	1755	475	254	14°	10°	14°

GROVE GMK6450-1
450T ALL-TERRAIN CRANE

Telescopic boom

15,39 - 60,0 m | 8,5 m | 360°

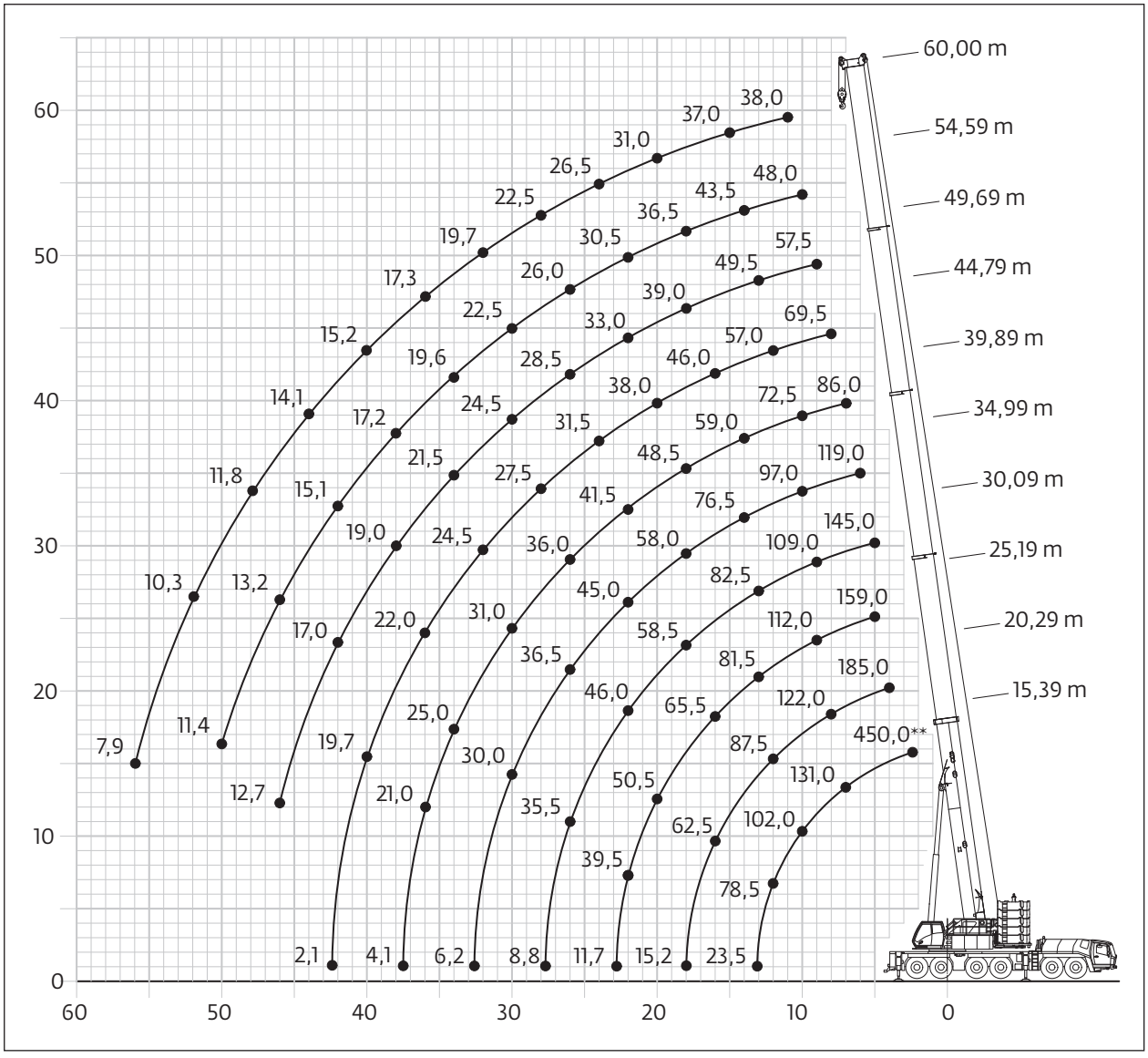

	Hook block (t)	H (mm)
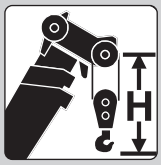	320 D	4050
	250 D	3950
	200 D	3650
	160 D	3650
	100 D/S	3300
	40 D/S	3200
	16 H/B	2600

GROVE GMK6450-1
450T ALL-TERRAIN CRANE

Telescopic boom

 15,39 - 60,0 m

 8,5 m

 360°

 135 t





EN 13000

m	15,39*	15,39	20,29	25,19	30,09	34,99	39,89	44,79	49,69	54,59	58,65	60,00	m
2,4	450,0**	-	-	-	-	-	-	-	-	-	-	-	**2,4**
3,0	-	-	-	-	-	-	-	-	-	-	-	-	**3,0**
4,0	-	-	-	-	-	-	-	-	-	-	-	-	**4,0**
5,0	-	-	-	-	-	-	-	-	-	-	-	-	**5,0**
6,0	-	-	-	-	-	-	-	-	-	-	-	-	**6,0**
7,0	-	-	-	-	-	-	-	-	-	-	-	-	**7,0**
8,0	-	123,0	122,0	121,0	-	-	-	-	-	-	-	-	**8,0**
9,0	-	112,0	112,0	112,0	107,0	-	77,0	67,0	-	-	-	-	**9,0**
10,0	-	102,0	103,0	103,0	101,0	97,0	72,5	64,0	56,0	-	-	-	**10,0**
11,0	-	93,5	94,5	94,5	94,5	91,5	69,0	60,5	54,0	47,5	40,0	38,0	**11,0**
12,0	-	78,5	87,5	87,5	89,0	86,5	65,5	57,0	52,0	46,5	40,0	38,0	**12,0**
13,0	-	23,5	81,0	81,5	82,5	82,0	62,0	54,0	49,5	45,0	40,0	38,0	**13,0**
14,0	-	-	75,5	75,5	77,0	76,5	59,0	51,0	47,0	43,5	39,5	38,0	**14,0**
15,0	-	-	69,5	70,5	72,0	71,0	56,0	48,5	44,5	41,5	38,5	37,0	**15,0**
16,0	-	-	62,5	65,5	67,0	66,0	53,5	46,0	42,5	40,0	37,0	36,0	**16,0**
18,0	-	-	16,1	57,5	58,5	58,0	48,5	41,5	39,0	36,5	34,5	33,5	**18,0**
20,0	-	-	-	50,5	52,0	51,0	44,5	38,0	35,5	33,5	31,5	31,0	**20,0**
22,0	-	-	-	40,0	46,0	45,0	41,5	34,0	33,0	30,5	29,0	28,5	**22,0**
24,0	-	-	-	7,5	41,0	40,5	38,5	31,5	30,5	28,5	27,0	26,5	**24,0**
26,0	-	-	-	-	35,5	36,5	36,0	29,5	28,5	26,5	25,0	24,5	**26,0**
28,0	-	-	-	-	-	33,0	34,0	27,5	26,5	24,5	23,5	22,5	**28,0**
30,0	-	-	-	-	-	30,0	31,0	26,0	24,5	23,0	21,5	21,0	**30,0**
32,0	-	-	-	-	-	6,2	28,5	24,5	23,0	21,5	20,0	19,7	**32,0**
34,0	-	-	-	-	-	-	25,0	23,0	21,5	20,0	18,8	18,4	**34,0**
36,0	-	-	-	-	-	-	21,0	22,0	20,0	19,1	17,7	17,3	**36,0**
38,0	-	-	-	-	-	-	-	21,0	19,0	18,0	16,6	16,2	**38,0**
40,0	-	-	-	-	-	-	-	19,7	17,9	16,9	15,5	15,2	**40,0**
42,0	-	-	-	-	-	-	-	-	17,0	16,0	14,7	14,3	**42,0**
44,0	-	-	-	-	-	-	-	-	16,0	15,1	13,8	13,4	**44,0**
46,0	-	-	-	-	-	-	-	-	12,7	14,4	12,9	12,6	**46,0**
48,0	-	-	-	-	-	-	-	-	-	13,7	12,1	11,8	**48,0**
50,0	-	-	-	-	-	-	-	-	-	11,4	11,2	10,9	**50,0**
52,0	-	-	-	-	-	-	-	-	-	-	10,6	10,3	**52,0**
54,0	-	-	-	-	-	-	-	-	-	-	9,9	9,7	**54,0**
56,0	-	-	-	-	-	-	-	-	-	-	-	7,9	**56,0**

** over rear*
*** Over rear with special equipment.*

S K Y L I F T Crane Services (Aust) Pty Ltd
www.skyliftcranes.com.au
www.skylifttowercranes.com.au

GROVE GMK6450-1
450T ALL-TERRAIN CRANE

Telescopic boom





15,39 - 60,0 m | 8,5 m | 360° | 115 t









EN 13000

m	15,39	20,29	25,19	30,09	34,99	39,89	44,79	49,69	54,59	58,65	60,00	m
5,0	170,0	167,0	157,0	-	-	-	-	-	-	-	-	**5,0**
6,0	150,0	150,0	144,0	137,0	119,0	-	-	-	-	-	-	**6,0**
7,0	134,0	134,0	132,0	125,0	119,0	86,0	-	-	-	-	-	**7,0**
8,0	120,0	121,0	121,0	116,0	112,0	82,0	69,5	-	-	-	-	**8,0**
9,0	109,0	110,0	110,0	109,0	104,0	77,0	67,0	57,5	-	-	-	**9,0**
10,0	100,0	101,0	101,0	101,0	97,0	72,5	64,0	56,0	48,0	-	-	**10,0**
11,0	92,0	92,5	93,0	94,0	91,5	69,0	60,5	54,0	47,5	40,0	38,0	**11,0**
12,0	78,5	85,0	85,0	86,5	85,0	65,5	57,0	52,0	46,5	40,0	38,0	**12,0**
13,0	23,5	78,0	78,0	79,0	78,5	62,0	54,0	49,5	45,0	40,0	38,0	**13,0**
14,0	-	72,0	72,0	73,0	72,5	59,0	51,0	47,0	43,5	39,5	38,0	**14,0**
15,0	-	67,0	66,0	67,5	67,0	56,0	48,5	44,5	41,5	38,5	37,0	**15,0**
16,0	-	62,0	62,0	62,5	61,5	53,5	46,0	42,5	40,0	37,0	36,0	**16,0**
18,0	-	16,1	54,0	54,0	53,0	48,5	41,5	39,0	36,5	34,5	33,5	**18,0**
20,0	-	-	47,5	47,0	46,5	44,5	38,0	35,5	33,5	31,5	31,0	**20,0**
22,0	-	-	39,5	41,5	41,0	41,5	34,0	33,0	30,5	29,0	28,5	**22,0**
24,0	-	-	-	37,5	36,5	37,5	31,5	30,5	28,5	27,0	26,5	**24,0**
26,0	-	-	-	33,5	33,0	33,5	29,5	28,5	26,5	25,0	24,5	**26,0**
28,0	-	-	-	-	30,5	30,5	27,5	26,5	24,5	23,5	22,5	**28,0**
30,0	-	-	-	-	28,5	28,0	26,0	24,5	23,0	21,5	21,0	**30,0**
32,0	-	-	-	-	6,2	25,5	24,5	23,0	21,5	20,0	19,7	**32,0**
34,0	-	-	-	-	-	23,5	23,0	21,5	20,0	18,8	18,4	**34,0**
36,0	-	-	-	-	-	21,0	21,5	20,0	19,1	17,7	17,3	**36,0**
38,0	-	-	-	-	-	-	19,7	19,0	18,0	16,6	16,2	**38,0**
40,0	-	-	-	-	-	-	18,1	17,9	16,9	15,5	15,2	**40,0**
42,0	-	-	-	-	-	-	2,1	16,5	16,0	14,7	14,3	**42,0**
44,0	-	-	-	-	-	-	-	15,2	15,1	13,8	13,4	**44,0**
46,0	-	-	-	-	-	-	-	12,7	14,2	12,9	12,6	**46,0**
48,0	-	-	-	-	-	-	-	-	13,2	12,1	11,8	**48,0**
50,0	-	-	-	-	-	-	-	-	11,3	11,2	10,9	**50,0**
52,0	-	-	-	-	-	-	-	-	-	10,6	10,3	**52,0**
54,0	-	-	-	-	-	-	-	-	-	9,8	9,7	**54,0**
56,0	-	-	-	-	-	-	-	-	-	-	7,9	**56,0**

GROVE GMK6450-1
450T ALL-TERRAIN CRANE

Telescopic boom

 15,39 - 60,0 m

 8,5 m

 360°

 95 t





EN 13000

m	15,39	20,29	25,19	30,09	34,99	39,89	44,79	49,69	54,59	58,65	60,00	m
3,0	225,0	-	-	-	-	-	-	-	-	-	-	**3,0**
4,0	192,0	187,0	-	-	-	-	-	-	-	-	-	**4,0**
5,0	167,0	167,0	159,0	145,0	-	-	-	-	-	-	-	**5,0**
6,0	147,0	148,0	144,0	137,0	119,0	-	-	-	-	-	-	**6,0**
7,0	131,0	132,0	132,0	125,0	119,0	86,0	-	-	-	-	-	**7,0**
8,0	118,0	119,0	119,0	116,0	112,0	82,0	69,5	-	-	-	-	**8,0**
9,0	107,0	108,0	108,0	109,0	104,0	77,0	67,0	57,5	-	-	-	**9,0**
10,0	96,5	97,0	97,5	98,5	97,0	72,5	64,0	56,0	48,0	-	-	**10,0**
11,0	87,0	88,0	88,0	89,0	88,5	69,0	60,5	54,0	47,5	40,0	38,0	**11,0**
12,0	78,0	79,0	79,0	80,5	80,0	65,5	57,0	52,0	46,5	40,0	38,0	**12,0**
13,0	23,5	72,5	73,0	73,0	72,5	62,0	54,0	49,5	45,0	40,0	38,0	**13,0**
14,0	-	66,0	67,0	66,5	66,0	59,0	51,0	47,0	43,5	39,5	38,0	**14,0**
15,0	-	60,5	61,5	61,0	60,5	56,0	48,5	44,5	41,5	38,5	37,0	**15,0**
16,0	-	56,0	56,5	56,5	55,5	53,5	46,0	42,5	40,0	37,0	36,0	**16,0**
18,0	-	16,1	49,0	48,5	48,0	48,5	41,5	39,0	36,5	34,5	33,5	**18,0**
20,0	-	-	42,5	42,5	41,5	43,0	38,0	35,5	33,5	31,5	31,0	**20,0**
22,0	-	-	38,0	37,5	37,0	38,0	34,0	33,0	30,5	29,0	28,5	**22,0**
24,0	-	-	7,5	33,0	34,5	33,5	31,5	30,5	28,5	27,0	26,5	**24,0**
26,0	-	-	-	29,5	30,5	29,5	29,5	28,5	26,5	25,0	24,5	**26,0**
28,0	-	-	-	-	27,0	26,0	26,5	26,5	24,5	23,5	22,5	**28,0**
30,0	-	-	-	-	24,5	23,5	24,0	23,5	23,0	21,5	21,0	**30,0**
32,0	-	-	-	-	6,2	22,0	21,5	21,5	21,5	20,0	19,7	**32,0**
34,0	-	-	-	-	-	20,0	19,7	19,2	19,5	18,8	18,4	**34,0**
36,0	-	-	-	-	-	18,4	18,0	17,8	17,6	17,0	16,9	**36,0**
38,0	-	-	-	-	-	-	16,4	16,6	16,0	15,4	15,3	**38,0**
40,0	-	-	-	-	-	-	15,0	15,2	14,6	14,0	13,8	**40,0**
42,0	-	-	-	-	-	-	2,1	13,9	13,3	12,7	12,6	**42,0**
44,0	-	-	-	-	-	-	-	12,8	12,2	11,6	11,4	**44,0**
46,0	-	-	-	-	-	-	-	11,0	11,2	10,5	10,4	**46,0**
48,0	-	-	-	-	-	-	-	-	10,2	9,6	9,4	**48,0**
50,0	-	-	-	-	-	-	-	-	9,4	8,7	8,6	**50,0**
52,0	-	-	-	-	-	-	-	-	-	7,9	7,7	**52,0**
54,0	-	-	-	-	-	-	-	-	-	7,2	7,0	**54,0**
56,0	-	-	-	-	-	-	-	-	-	-	6,3	**56,0**

GROVE GMK6450-1
450T ALL-TERRAIN CRANE

Telescopic boom

 15,39 - 60,0 m

 8,5 m

 360°

 75 t





EN 13000

m	15,39	20,29	25,19	30,09	34,99	39,89	44,79	49,69	54,59	58,65	60,00	m
3,0	221,0	-	-	-	-	-	-	-	-	-	-	**3,0**
4,0	188,0	187,0	-	-	-	-	-	-	-	-	-	**4,0**
5,0	164,0	164,0	159,0	145,0	-	-	-	-	-	-	-	**5,0**
6,0	144,0	145,0	144,0	137,0	119,0	-	-	-	-	-	-	**6,0**
7,0	128,0	129,0	129,0	125,0	119,0	86,0	-	-	-	-	-	**7,0**
8,0	114,0	115,0	115,0	116,0	112,0	82,0	69,5	-	-	-	-	**8,0**
9,0	101,0	102,0	102,0	103,0	102,0	77,0	67,0	57,5	-	-	-	**9,0**
10,0	88,0	89,0	89,5	91,0	89,5	72,5	64,0	56,0	48,0	-	-	**10,0**
11,0	78,0	80,0	81,0	80,5	79,5	69,0	60,5	54,0	47,5	40,0	38,0	**11,0**
12,0	70,0	72,0	72,5	72,5	71,0	65,5	57,0	52,0	46,5	40,0	38,0	**12,0**
13,0	23,5	65,0	66,0	65,5	64,5	62,0	54,0	49,5	45,0	40,0	38,0	**13,0**
14,0	-	59,5	60,0	60,0	58,5	58,0	51,0	47,0	43,5	39,5	38,0	**14,0**
15,0	-	54,5	55,0	55,0	53,5	53,0	48,5	44,5	41,5	38,5	37,0	**15,0**
16,0	-	50,0	50,5	50,5	49,0	49,0	45,5	42,5	40,0	37,0	36,0	**16,0**
18,0	-	16,1	42,5	42,0	43,5	42,0	40,5	39,0	36,5	34,5	33,5	**18,0**
20,0	-	-	36,0	36,0	37,0	36,0	36,0	35,0	33,5	31,5	31,0	**20,0**
22,0	-	-	31,5	32,5	32,0	31,0	31,5	31,0	30,5	29,0	28,5	**22,0**
24,0	-	-	10,8	28,5	28,0	28,5	28,0	27,5	27,0	26,0	25,5	**24,0**
26,0	-	-	-	25,0	24,5	25,0	24,5	24,5	24,0	23,0	23,0	**26,0**
28,0	-	-	-	-	22,0	22,0	22,5	22,0	21,5	20,5	20,5	**28,0**
30,0	-	-	-	-	19,9	19,7	20,0	19,5	19,0	18,4	18,2	**30,0**
32,0	-	-	-	-	6,2	17,7	18,0	17,5	17,0	16,3	16,1	**32,0**
34,0	-	-	-	-	-	15,9	16,2	15,7	15,2	14,5	14,3	**34,0**
36,0	-	-	-	-	-	14,4	14,6	14,1	13,5	12,9	12,7	**36,0**
38,0	-	-	-	-	-	-	13,3	12,7	12,1	11,4	11,2	**38,0**
40,0	-	-	-	-	-	-	11,2	11,5	10,8	10,1	9,9	**40,0**
42,0	-	-	-	-	-	-	-	10,3	9,7	9,0	8,8	**42,0**
44,0	-	-	-	-	-	-	-	9,4	8,7	8,0	7,8	**44,0**
46,0	-	-	-	-	-	-	-	7,6	7,8	7,0	6,9	**46,0**
48,0	-	-	-	-	-	-	-	-	6,9	6,2	6,0	**48,0**
50,0	-	-	-	-	-	-	-	-	6,2	5,4	5,2	**50,0**
52,0	-	-	-	-	-	-	-	-	-	4,7	4,5	**52,0**
54,0	-	-	-	-	-	-	-	-	-	4,1	3,9	**54,0**
56,0	-	-	-	-	-	-	-	-	-	-	3,3	**56,0**

GROVE GMK6450-1
450T ALL-TERRAIN CRANE

Telescopic boom

 15,39 - 60,0 m

 8,5 m

 360°

 55 t





EN 13000

m	15,39	20,29	25,19	30,09	34,99	39,89	44,79	49,69	54,59	58,65	60,00	m
3,0	217,0	-	-	-	-	-	-	-	-	-	-	**3,0**
4,0	185,0	185,0	-	-	-	-	-	-	-	-	-	**4,0**
5,0	160,0	161,0	159,0	145,0	-	-	-	-	-	-	-	**5,0**
6,0	141,0	142,0	142,0	137,0	119,0	-	-	-	-	-	-	**6,0**
7,0	123,0	124,0	124,0	123,0	113,0	86,0	-	-	-	-	-	**7,0**
8,0	104,0	105,0	106,0	103,0	96,0	82,0	69,5	-	-	-	-	**8,0**
9,0	89,5	92,0	92,5	88,5	82,5	77,0	67,0	57,5	-	-	-	**9,0**
10,0	78,5	80,5	81,0	77,0	72,0	70,5	64,0	56,0	48,0	-	-	**10,0**
11,0	68,5	71,5	71,5	68,0	64,5	62,5	58,0	54,0	47,5	40,0	38,0	**11,0**
12,0	59,0	62,5	63,5	60,5	60,0	56,5	54,0	51,5	46,5	40,0	38,0	**12,0**
13,0	23,5	54,5	56,0	54,5	54,0	51,0	49,5	47,5	45,0	40,0	38,0	**13,0**
14,0	-	48,5	49,5	49,0	49,0	46,0	45,0	43,5	41,5	39,5	38,0	**14,0**
15,0	-	43,0	44,5	45,5	45,0	43,0	42,0	41,0	38,0	37,5	37,0	**15,0**
16,0	-	39,0	40,5	41,5	41,0	40,5	38,5	38,5	36,0	34,5	34,0	**16,0**
18,0	-	16,2	33,5	34,5	34,0	34,5	33,0	33,0	31,0	29,5	29,0	**18,0**
20,0	-	-	28,0	29,0	29,5	29,0	28,5	28,5	27,0	25,5	25,0	**20,0**
22,0	-	-	24,0	25,0	25,5	25,0	24,5	24,5	23,5	22,5	22,0	**22,0**
24,0	-	-	-	22,0	22,0	22,0	21,0	21,0	20,5	19,6	19,2	**24,0**
26,0	-	-	-	19,0	19,1	19,1	18,1	18,4	17,8	17,1	16,9	**26,0**
28,0	-	-	-	16,6	16,7	16,7	15,7	16,0	15,4	14,7	14,5	**28,0**
30,0	-	-	-	-	14,7	14,7	13,7	14,0	13,4	12,7	12,5	**30,0**
32,0	-	-	-	-	12,9	13,0	12,0	12,3	11,7	11,0	10,8	**32,0**
34,0	-	-	-	-	5,8	11,5	10,5	10,8	10,2	9,5	9,3	**34,0**
36,0	-	-	-	-	-	10,0	9,2	9,4	8,8	8,2	8,0	**36,0**
38,0	-	-	-	-	-	8,9	8,1	8,3	7,7	7,0	6,8	**38,0**
40,0	-	-	-	-	-	3,4	7,0	7,3	6,6	6,0	5,8	**40,0**
42,0	-	-	-	-	-	-	-	6,4	5,7	5,0	4,8	**42,0**
44,0	-	-	-	-	-	-	-	5,6	4,9	4,2	4,0	**44,0**
46,0	-	-	-	-	-	-	-	4,0	4,2	3,4	3,2	**46,0**
48,0	-	-	-	-	-	-	-	-	3,5	2,8	2,6	**48,0**
50,0	-	-	-	-	-	-	-	-	2,9	2,1	1,9	**50,0**
52,0	-	-	-	-	-	-	-	-	-	1,6	-	**52,0**

GROVE GMK6450-1
450T ALL-TERRAIN CRANE

MegaWingLift™
Telescopic boom

34,99 - 60,0 m | 8,5 m | 360°

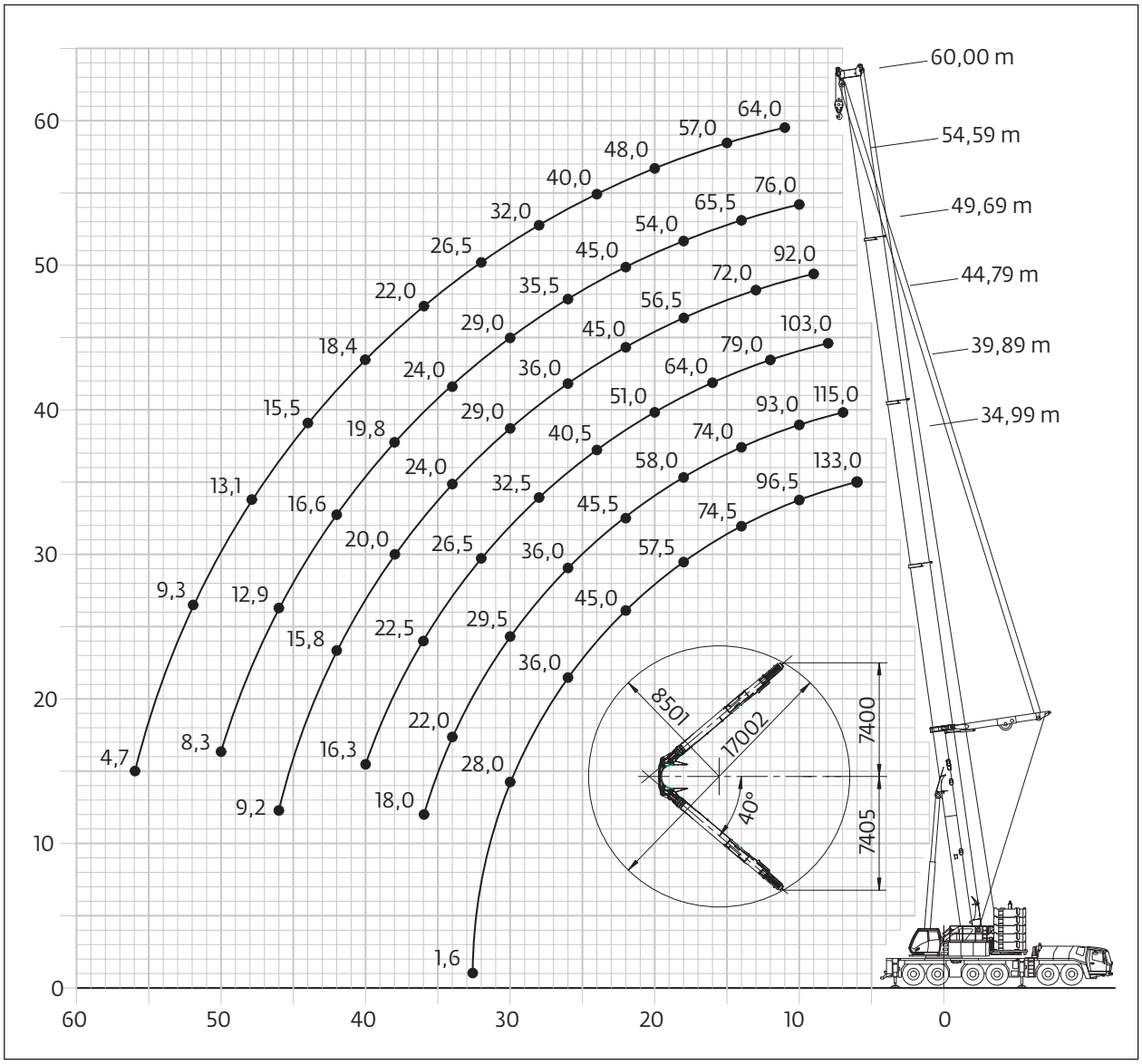

GROVE GMK6450-1
450T ALL-TERRAIN CRANE

MegaWingLift™
Telescopic boom

 34,99 - 60,0 m

 8,5 m

 360°

 135 t





EN 13000

m	34,99	39,89	44,79	49,69	54,59	60,00	m
8,0	109,0	105,0	103,0	-	-	-	**8,0**
9,0	101,0	97,0	94,5	92,0	-	-	**9,0**
10,0	96,5	93,0	90,0	87,5	76,0	-	**10,0**
11,0	90,5	87,0	84,0	81,5	76,0	64,0	**11,0**
12,0	85,5	82,0	79,0	76,5	74,0	64,0	**12,0**
13,0	80,5	77,5	74,5	72,0	69,5	61,5	**13,0**
14,0	74,5	74,0	70,5	68,0	65,5	59,5	**14,0**
15,0	70,0	70,0	67,5	64,5	62,0	57,0	**15,0**
16,0	65,5	65,5	64,0	61,5	59,0	55,0	**16,0**
18,0	57,5	58,0	58,0	56,5	54,0	51,5	**18,0**
20,0	50,5	51,0	51,0	51,0	49,5	48,0	**20,0**
22,0	45,0	45,5	45,5	45,0	45,0	44,5	**22,0**
24,0	40,0	40,5	40,5	40,0	39,5	40,0	**24,0**
26,0	36,0	36,0	36,0	36,0	35,5	36,0	**26,0**
28,0	31,5	32,5	32,5	32,5	32,0	32,0	**28,0**
30,0	28,0	29,5	29,5	29,0	29,0	29,0	**30,0**
32,0	1,6	26,5	26,5	26,5	26,0	26,5	**32,0**
34,0	-	22,0	24,5	24,0	24,0	24,0	**34,0**
36,0	-	18,0	22,5	22,0	21,5	22,0	**36,0**
38,0	-	-	18,8	20,0	19,8	20,0	**38,0**
40,0	-	-	16,3	18,5	18,1	18,4	**40,0**
42,0	-	-	-	15,8	16,6	16,9	**42,0**
44,0	-	-	-	14,2	15,2	15,5	**44,0**
46,0	-	-	-	9,2	12,9	14,2	**46,0**
48,0	-	-	-	-	11,6	13,1	**48,0**
50,0	-	-	-	-	8,3	11,4	**50,0**
52,0	-	-	-	-	-	9,3	**52,0**
54,0	-	-	-	-	-	8,3	**54,0**
56,0	-	-	-	-	-	4,7	**56,0**

GROVE GMK6450-1
450T ALL-TERRAIN CRANE

MegaWingLift™
Telescopic boom

 34,99 - 60,0 m

 8,5 m

 360°

 115 t





EN 13000

m	34,99	39,89	44,79	49,69	54,59	60,00	m
6,0	131,0	-	-	-	-	-	**6,0**
7,0	121,0	115,0	-	-	-	-	**7,0**
8,0	111,0	108,0	103,0	-	-	-	**8,0**
9,0	103,0	100,0	97,0	92,0	-	-	**9,0**
10,0	96,5	93,0	90,0	87,5	76,0	-	**10,0**
11,0	90,5	87,0	84,0	81,5	76,0	64,0	**11,0**
12,0	85,0	82,0	79,0	76,5	74,0	64,0	**12,0**
13,0	78,5	77,5	74,5	72,0	69,5	61,5	**13,0**
14,0	72,5	73,0	70,5	68,0	65,5	59,5	**14,0**
15,0	67,0	67,5	67,5	64,5	62,0	57,0	**15,0**
16,0	62,5	62,5	62,5	61,5	59,0	55,0	**16,0**
18,0	53,5	54,0	53,5	53,5	53,0	51,5	**18,0**
20,0	46,5	47,0	47,0	46,5	46,0	46,5	**20,0**
22,0	41,0	41,0	41,0	41,0	40,5	41,0	**22,0**
24,0	36,0	36,5	36,5	36,5	36,0	36,0	**24,0**
26,0	32,5	32,5	32,5	32,5	32,0	32,5	**26,0**
28,0	29,0	29,5	29,0	29,0	28,5	29,0	**28,0**
30,0	26,0	26,5	26,5	26,0	26,0	26,0	**30,0**
32,0	1,6	24,0	24,0	23,5	23,5	23,5	**32,0**
34,0	-	21,5	21,5	21,5	21,0	21,5	**34,0**
36,0	-	18,0	19,7	19,5	19,1	19,4	**36,0**
38,0	-	-	17,9	17,7	17,2	17,5	**38,0**
40,0	-	-	16,2	15,9	15,5	15,8	**40,0**
42,0	-	-	-	14,4	13,9	14,2	**42,0**
44,0	-	-	-	13,1	12,6	12,8	**44,0**
46,0	-	-	-	9,2	11,3	11,6	**46,0**
48,0	-	-	-	-	10,2	10,4	**48,0**
50,0	-	-	-	-	8,3	9,4	**50,0**
52,0	-	-	-	-	-	8,5	**52,0**
54,0	-	-	-	-	-	7,6	**54,0**
56,0	-	-	-	-	-	4,7	**56,0**

GROVE GMK6450-1
450T ALL-TERRAIN CRANE

MegaWingLift™
Telescopic boom

 34,99 - 60,0 m

 8,5 m

 360°

 95 t





EN 13000

m	34,99	39,89	44,79	49,69	54,59	60,00	m
6,0	133,0	-	-	-	-	-	**6,0**
7,0	121,0	115,0	-	-	-	-	**7,0**
8,0	111,0	108,0	103,0	-	-	-	**8,0**
9,0	103,0	100,0	97,0	92,0	-	-	**9,0**
10,0	96,5	93,0	90,0	87,5	76,0	-	**10,0**
11,0	89,0	87,0	84,0	81,5	76,0	64,0	**11,0**
12,0	81,0	81,5	79,0	76,5	74,0	64,0	**12,0**
13,0	73,5	74,0	74,0	72,0	69,5	61,5	**13,0**
14,0	67,0	67,5	67,5	66,5	64,0	59,5	**14,0**
15,0	61,5	61,5	61,5	61,0	59,0	57,0	**15,0**
16,0	56,5	56,5	56,5	56,5	54,5	53,0	**16,0**
18,0	48,0	48,5	48,5	48,5	47,0	46,0	**18,0**
20,0	42,0	42,0	42,0	42,0	40,5	40,0	**20,0**
22,0	36,5	37,0	37,0	36,5	35,5	35,0	**22,0**
24,0	32,5	32,5	32,5	32,5	31,5	31,0	**24,0**
26,0	28,5	29,0	29,0	28,5	28,0	27,5	**26,0**
28,0	25,0	25,5	25,5	25,0	25,0	24,5	**28,0**
30,0	22,0	22,5	22,5	22,5	22,0	22,0	**30,0**
32,0	1,6	20,0	19,9	19,7	19,3	19,6	**32,0**
34,0	-	17,8	17,7	17,5	17,1	17,4	**34,0**
36,0	-	15,9	15,8	15,6	15,1	15,5	**36,0**
38,0	-	-	14,1	13,9	13,4	13,7	**38,0**
40,0	-	-	12,6	12,4	11,9	12,2	**40,0**
42,0	-	-	-	11,0	10,5	10,9	**42,0**
44,0	-	-	-	9,8	9,3	9,6	**44,0**
46,0	-	-	-	8,7	8,1	8,4	**46,0**
48,0	-	-	-	-	7,0	7,4	**48,0**
50,0	-	-	-	-	6,1	6,4	**50,0**
52,0	-	-	-	-	-	5,5	**52,0**
54,0	-	-	-	-	-	4,7	**54,0**
56,0	-	-	-	-	-	3,9	**56,0**

GROVE GMK6450-1
450T ALL-TERRAIN CRANE

Lattice extension

54,59 m | 12,0 - 64,0 m | 8,5 m | 360°

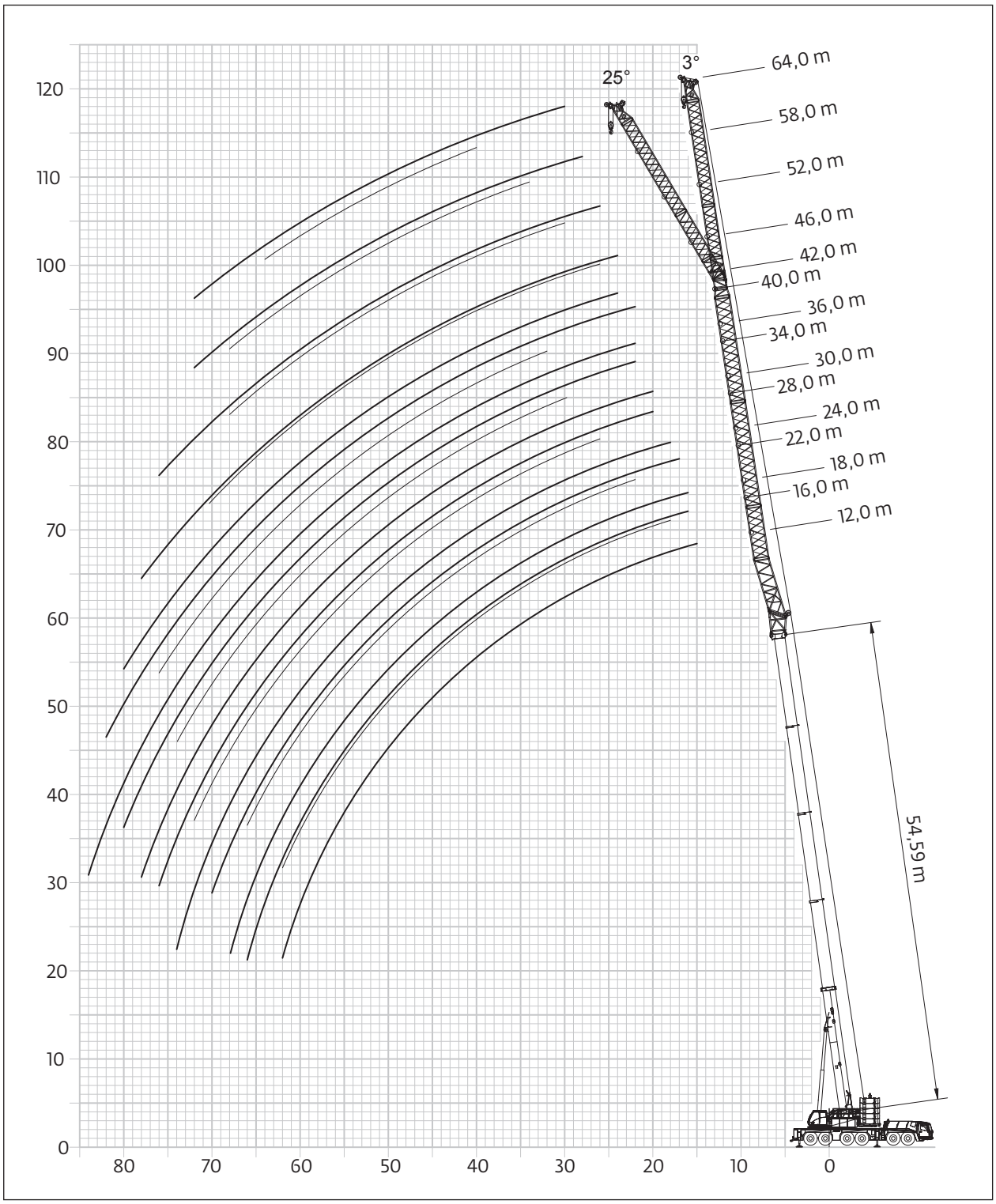

GROVE GMK6450-1
450T ALL-TERRAIN CRANE

Lattice extension

36,00 m | 12,0 - 36,0 m | 8,5 m | 360°

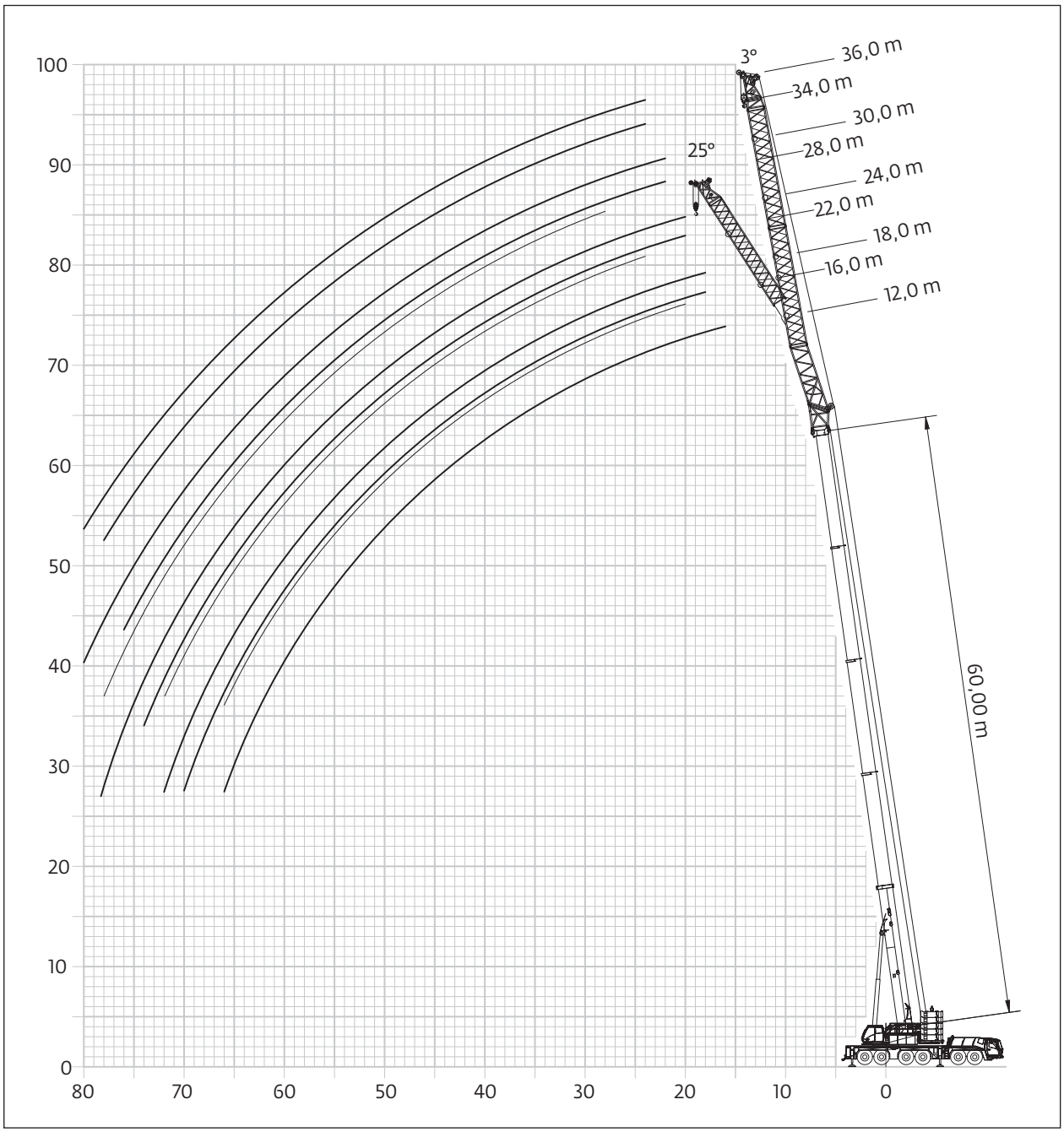

GROVE GMK6450-1
450T ALL-TERRAIN CRANE

MegaWingLift™
Lattice extension

34,99 - 54,59 m | 64 m | 8,5 m | 360° | 135 t

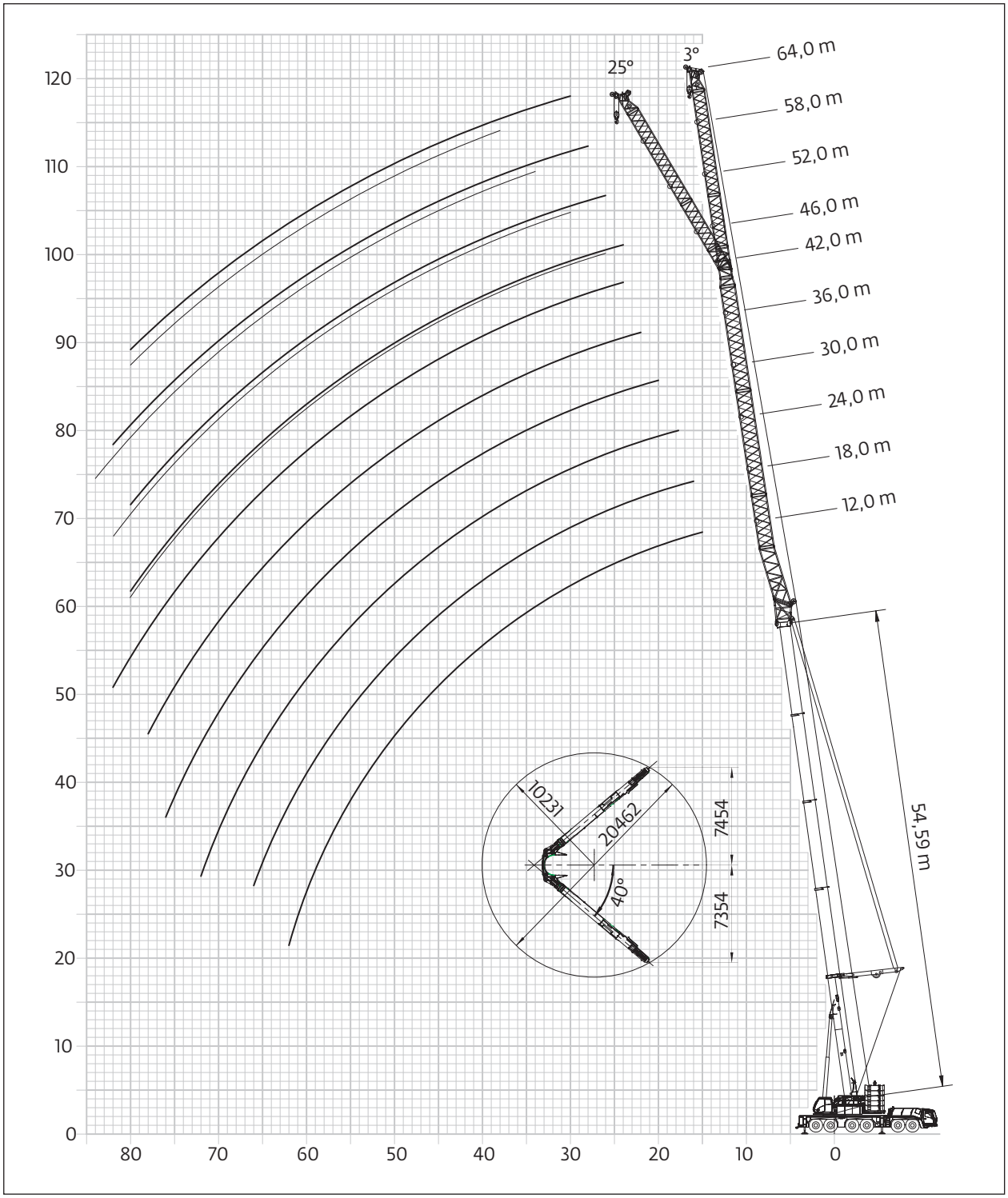

GROVE GMK6450-1
450T ALL-TERRAIN CRANE

MegaWingLift™
Lattice extension

60° - 70° - 80°
49,69 m

25 - 73 m

8,5 m

360°

135 t

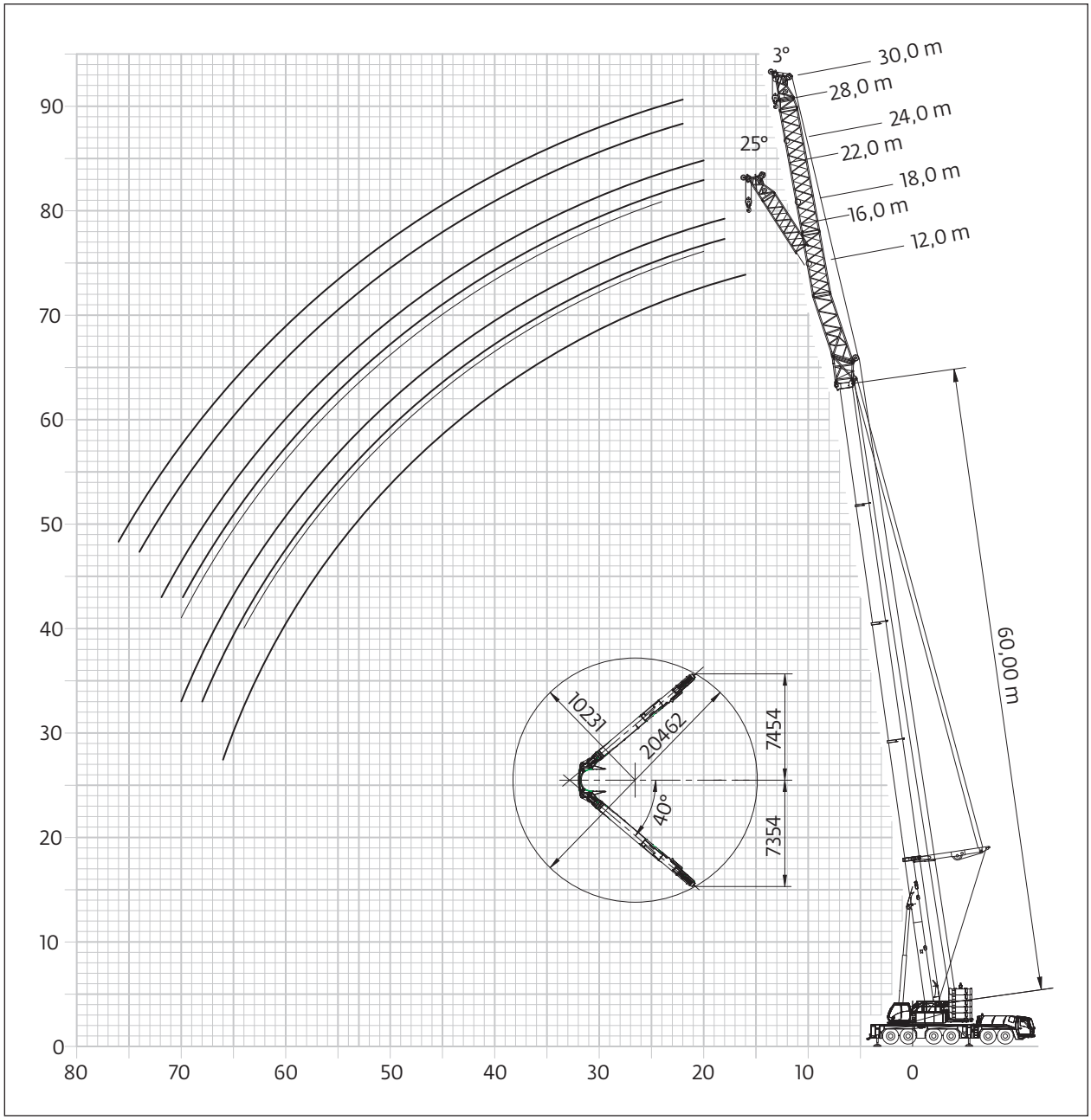

GROVE GMK6450-1
450T ALL-TERRAIN CRANE

Luffing jib

60° - 70° - 80°
49,69 m

25 - 73 m

8,5 m

360°

135 t

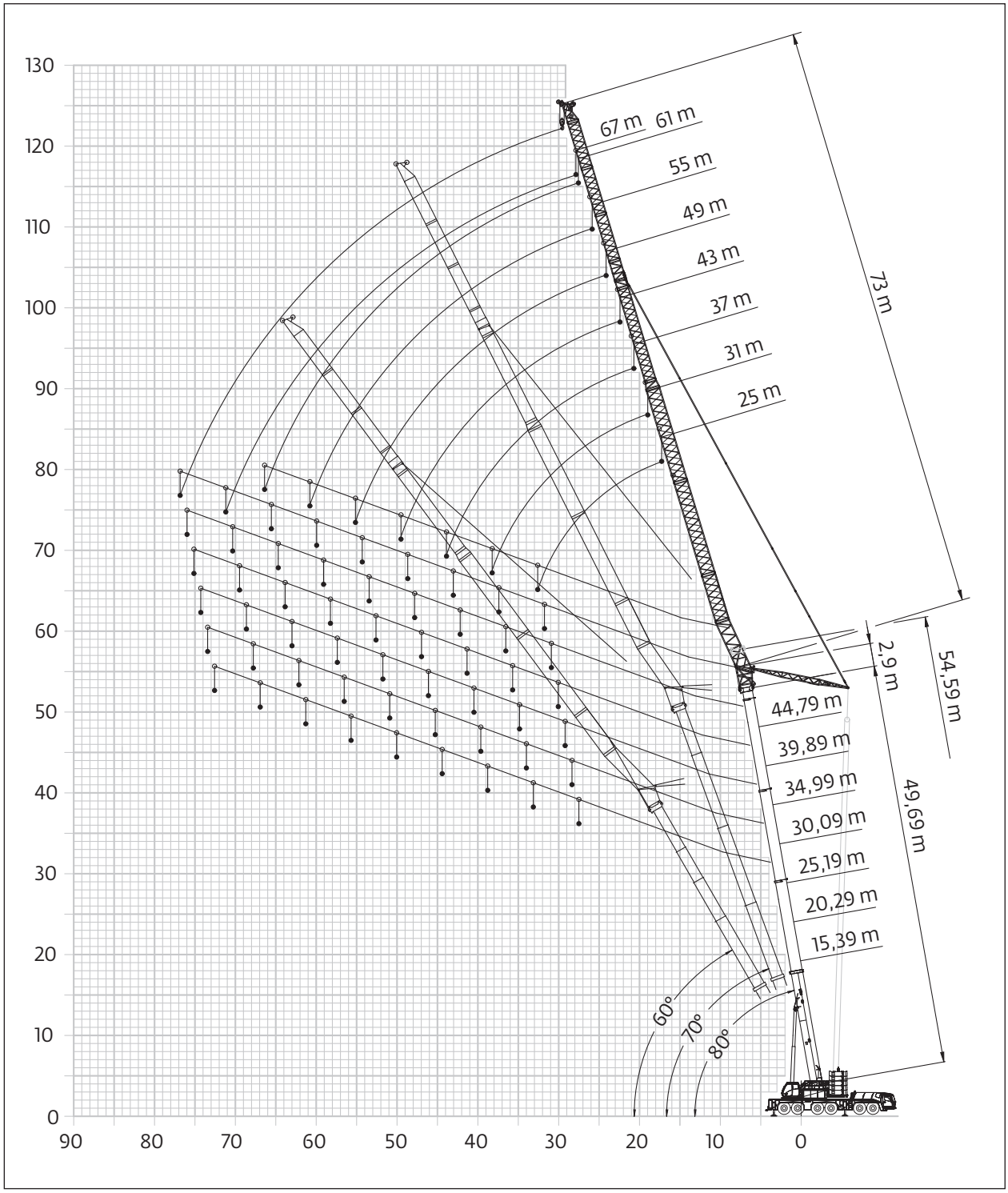

GROVE GMK6450-1
450T ALL-TERRAIN CRANE

MegaWingLift™
Luffing jib

60° - 70° - 80°
49,69 m

25 - 79 m

8,5 m

360°

135 t

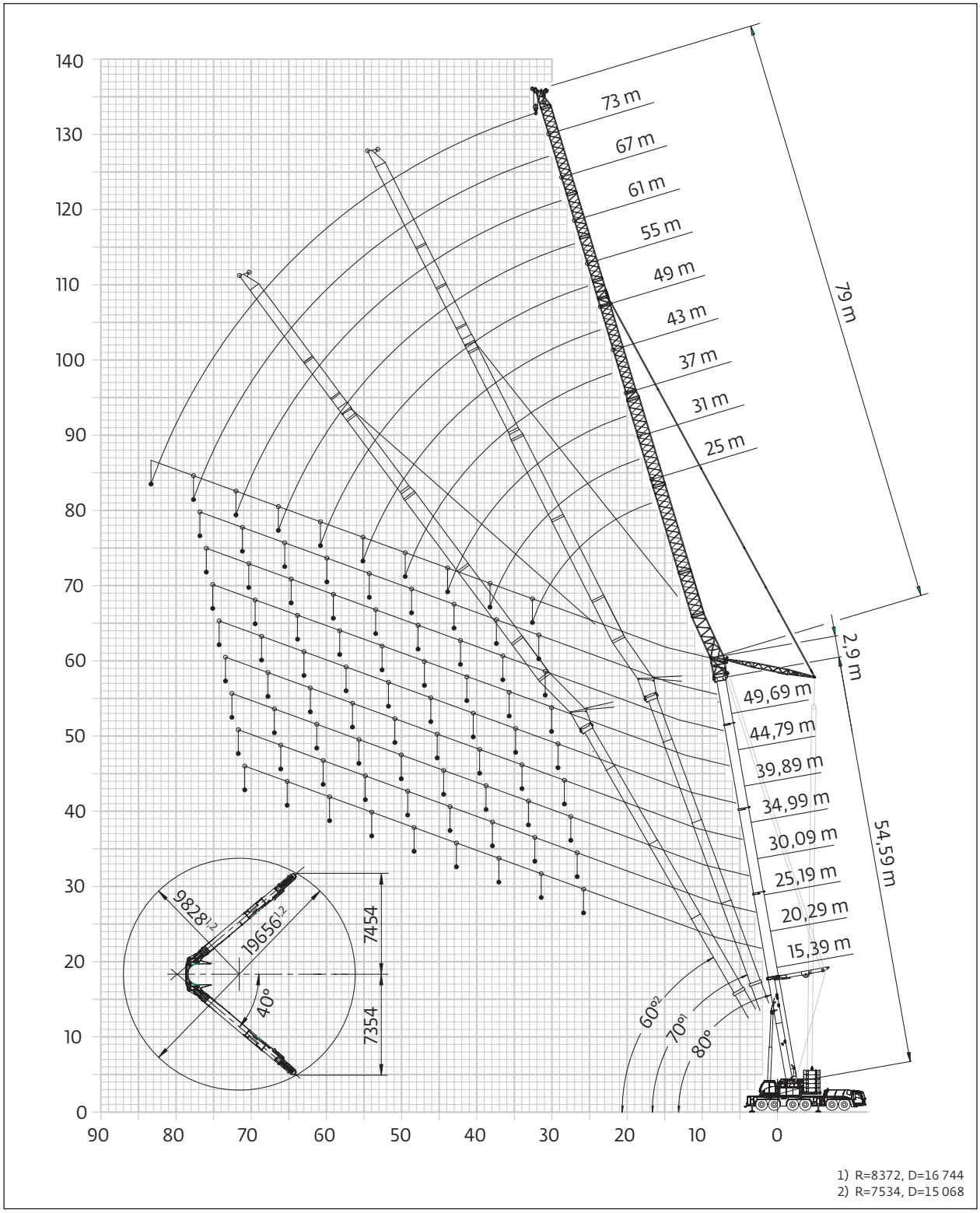

1) R=8372, D=16 744
2) R=7534, D=15 068

GROVE GMK6450-1
450T ALL-TERRAIN CRANE

Jib combinations

20°/42°
2,3 + 11,0 – 41 m

8,5 m

360°

135 t

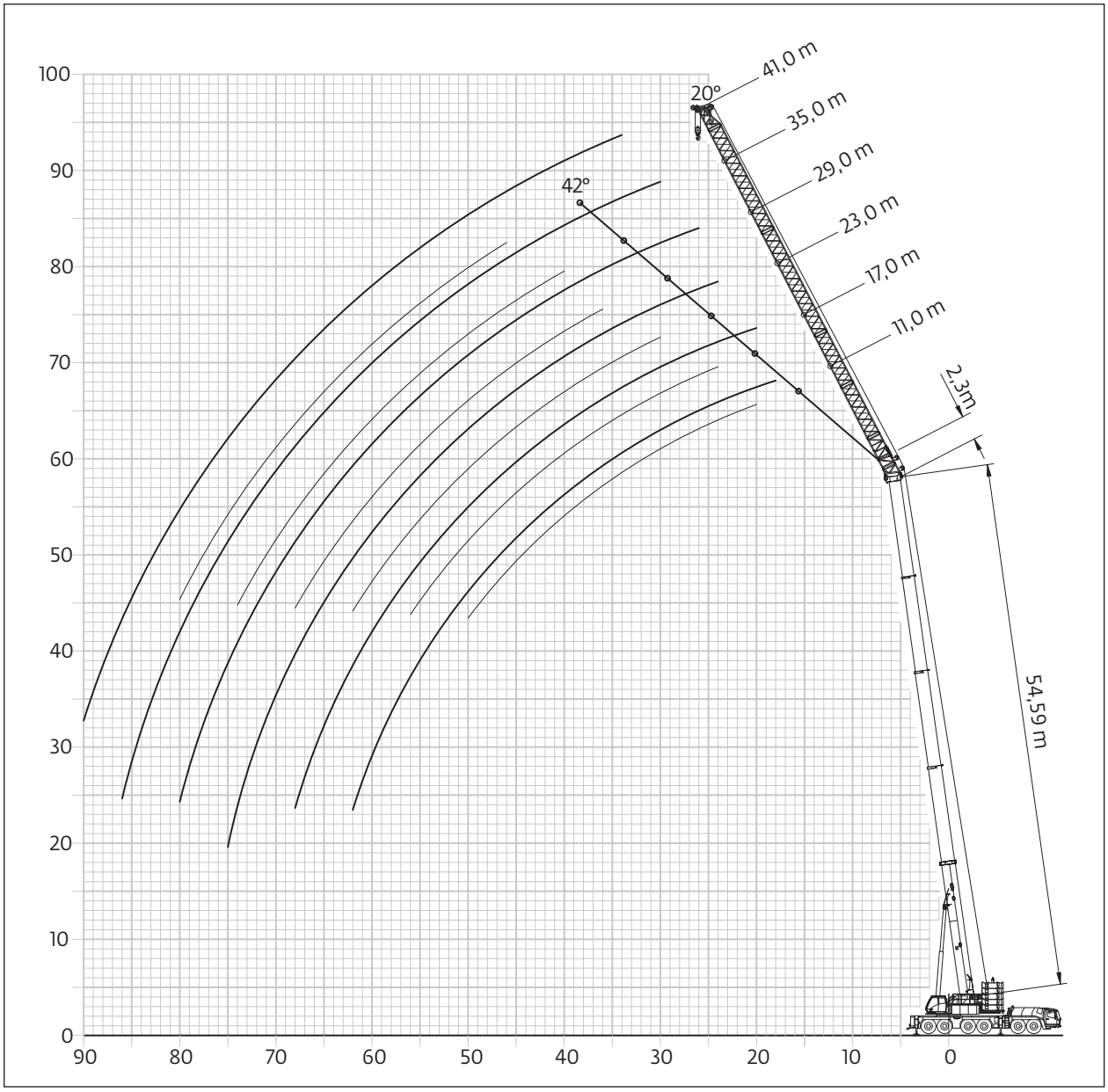

GROVE GMK6450-1
450T ALL-TERRAIN CRANE

MegaWingLift™
Jib combinations

20°/42°
2,3 + 11,0 – 23 m

8,5 m

360°

135 t

